# ATTACHED GARAGE DETAIL

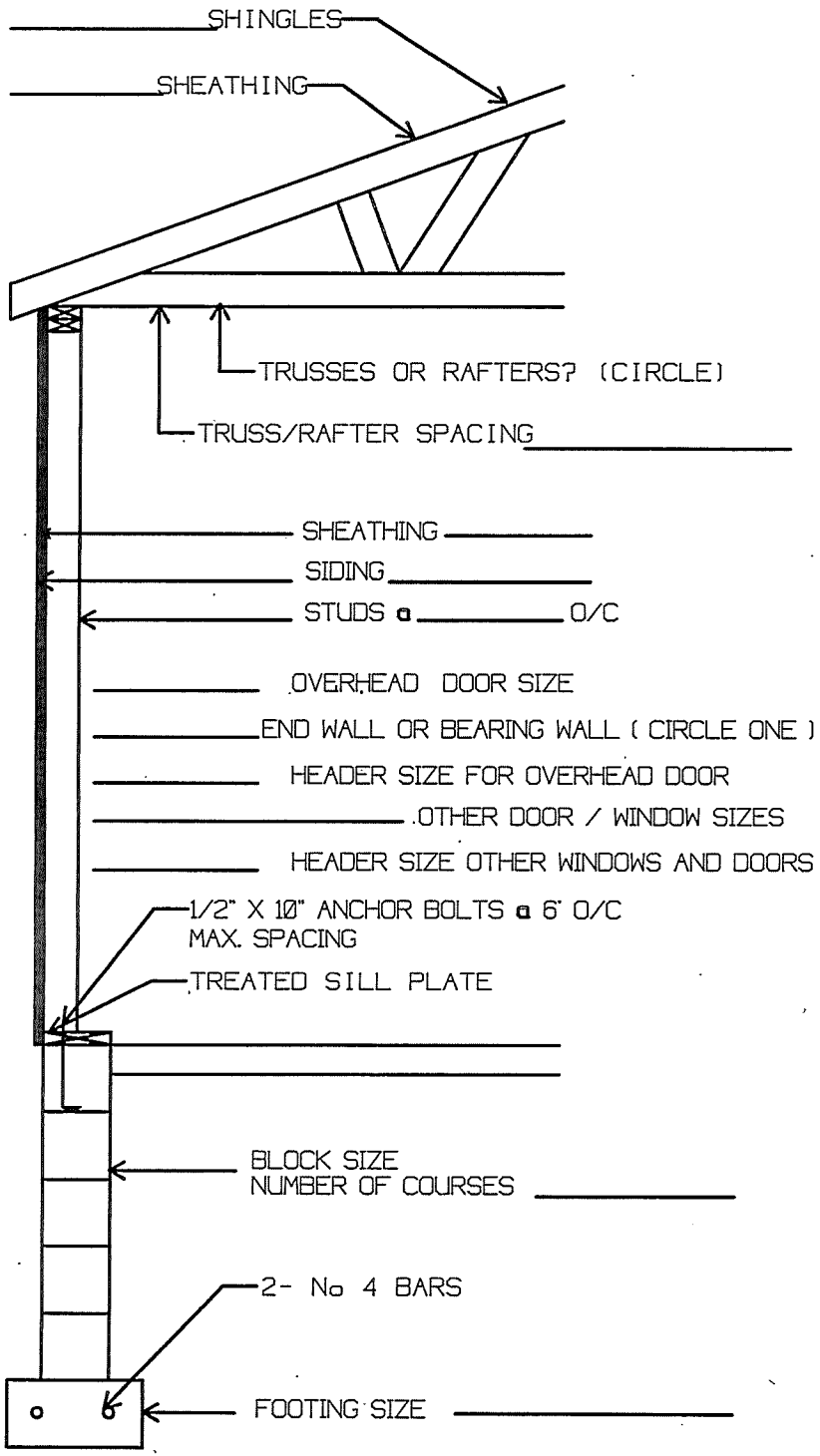


# GARAGE FLOOR PLAN

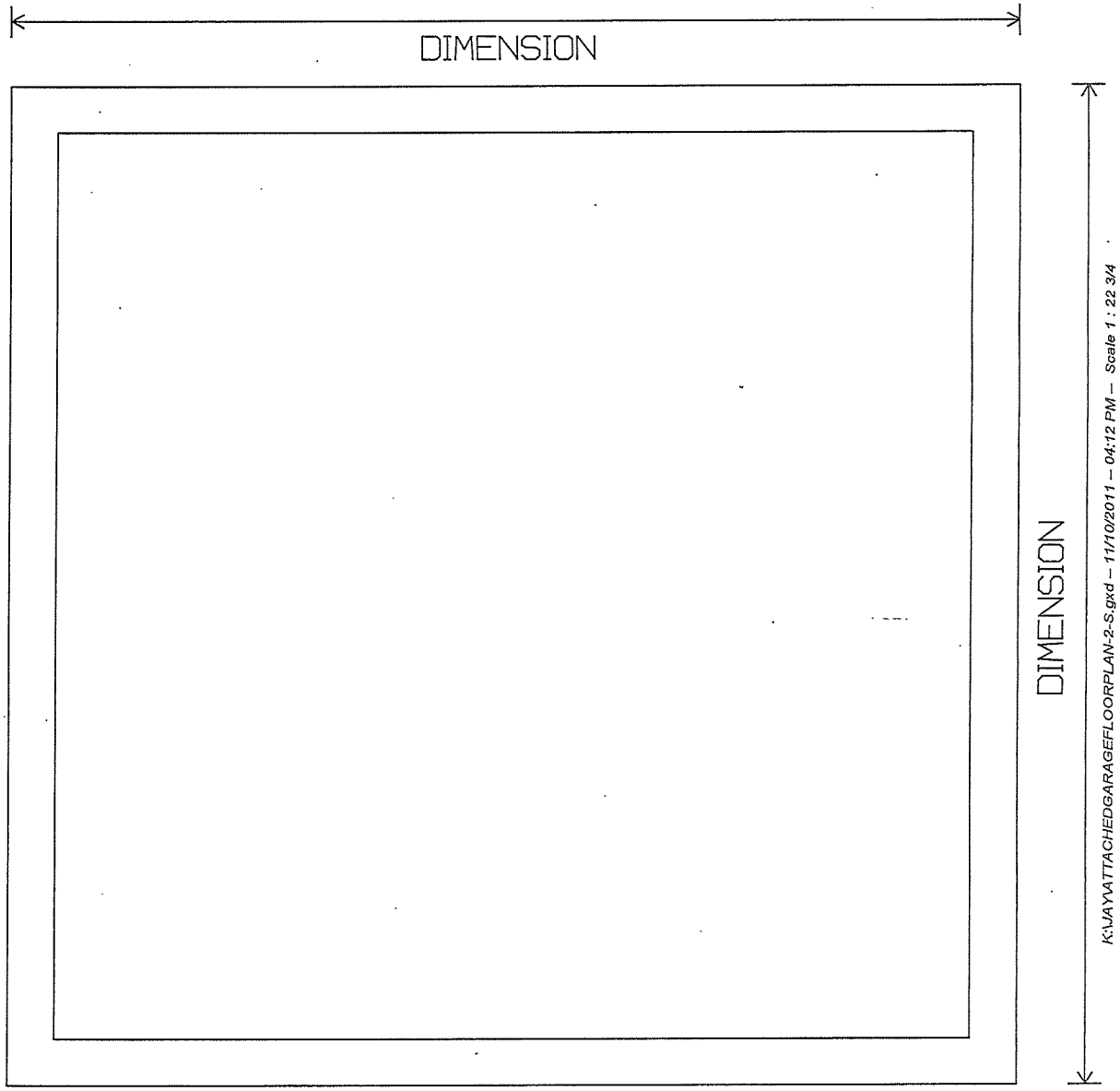


DRAW IN ALL WINDOW AND DOOR LOCATIONS
WITH SIZES AND HEADER SIZES

SHOW DIRECTION OF RAFTERS OR TRUSSES

SEE BACK FOR SAMPLE DRAWING

K:\JAYATTACHEDGARAGEFLOORPLAN-2-S.gxd – 11/10/2011 – 04:12 PM – Scale 1 : 22 3/4

## General building code requirements

The 2007 Minnesota State Building Code adopts the 2006 International Residential Code (2006 IRC). All "R" code references provided in this brochure pertain to the 2006 IRC.

a. Footings must extend to frost depth for all attached garages. A "floating slab" may be used for the foundation support of detached garages on all soils except peat and muck. The slab perimeter must be sized and/or reinforced to carry all design loads. The minimum-slab thickness must be 3½ inches and reinforcing is recommended. The minimum concrete strength required is 3500-pounds-per-square-inch for floating slab. Protect concrete from freezing until cured.

b. Anchor bolts or straps: Foundation plates must be anchored to the foundation with not less than ½ inch diameter steel bolts, or approved straps, embedded at least seven inches into the concrete and spaced not more than six feet apart. There must be a minimum of two bolts for each piece of sill plate with one bolt located within 12 inches of each end of each piece of sill plate. Anchor straps must be installed according to manufacturer's specifications.

c. Sill plate: All foundation sill plates must be approved pressure-preservative-treated wood, heartwood of redwood, black locust or cedar.

d. Wall framing: Studs must be placed with their wide dimension perpendicular to the wall and not less than three studs must be installed at each corner of an exterior wall. Minimum stud size is two inches by four inches and spaced not more than 24 inches on center.

The following samples show the minimum detail expected on site, floor and elevation plans to ensure the permit process proceeds smoothly. Additional information, such as sectional drawing or elevations, may be required. The plans should include the following information:

1. Proposed size of garage.
2. Location and size of door and window opening.
3. Size of headers over all doors and window openings.
4. Size, spacing and direction of rafter (roof) materials.
5. Type (grade and specie) of lumber to be used.
6. Braced wall panels per R602.10.

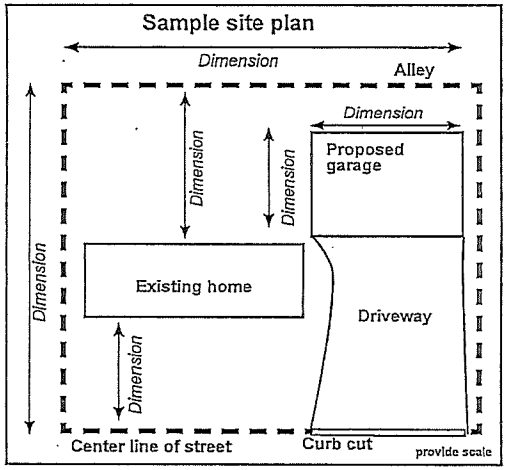


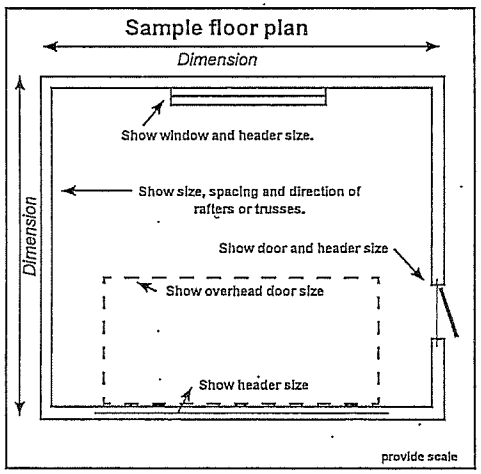


e. Top plate: Bearing and exterior wall studs need to be capped with double-top plates installed to provide overlapping at corners and at intersections with other partitions. End joints in double-top plates must be offset at least 24 inches.

f. Sheathing, roofing and siding: Approved wall sheathing, siding, roof sheathing and roof covering must be installed according to the manufacturer's specifications. Wall sheathing may be required to have a weather-resistive barrier installed over the product prior to application of the siding product.

g. Wood and earth separation: Wood used in construction located nearer than 6 inches to earth shall be treated wood.

h. Roof framing: Size and spacing of conventional lumber used for roof framing depends upon the roof pitch, span, the type of material being used and the loading characteristics being imposed. Garages must be designed for the appropriate snow load in your area. Contact your local building inspector. A snow load map is online at www.dli.mn.gov/ccld/pdf/bc_map_frost_depth.pdf.

Rafters need to be framed directly opposite each other at the ridge. A ridge board at least one inch (nominal) thickness and not less in depth than the cut end of the rafter is required for hand-framed roofs. At all valleys and hips, there also needs to be a single valley or hip rafter not less than two inches (nominal) thickness and not less in depth than the cut of the rafter. Valley needs to be designed as a beam.

Rafters must be nailed to the adjacent ceiling joist to form a continuous tie between exterior walls when the joists are parallel to the rafters. Where not parallel, rafters must be tied by a minimum one inch by four inch (nominal) cross tie spaced a maximum four foot on center. Manufactured trusses are to be installed per the manufacturer.

i. Separation required: An attached garage shall be separated from the residence and its attic area by not less than ½-inch (12.7 mm) gypsum board applied on the garage side. Where the separation is a floor-ceiling assembly, the structure supporting the separation shall be protected by not less than ⅝-inch (15.9 mm) type "X" gypsum board or equivalent.
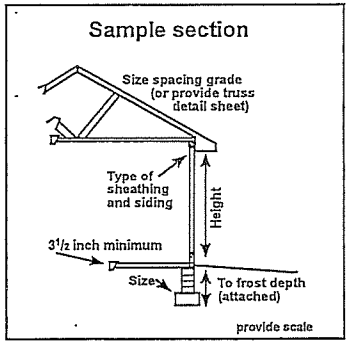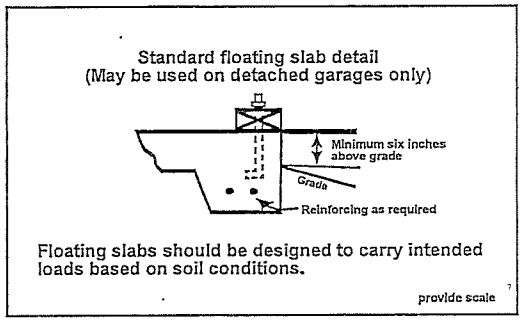
j. Concrete curb block: Concrete masonry curb blocks shall be at least 6-inch-modular width (4-inch-curb blocks are not permitted by code).